THE ALL-NEW MERCEDES-BENZ CLA

CLA 250+

CLASS OF ITS OWN.

Great minds think alike.
But the greatest, they think ahead.
At 254 trillion thoughts per second,
the all-new CLA is born to be the latter.

Driving in a whole new era of intuitive intelligence,
here is a car that doesn't just move through the world,
but understands it.

Behold the most intelligent Mercedes ever.
A companion you can converse with.
A supercomputer you can drive.
Made to remain entirely, and exceptionally
in a class of its own.

HIGHLIGHTS

CLA

ChatGPT
Gemini
Google Gemini
Microsoft Bing

CLA 250+
CLA

EXTERIOR DESIGN

THE BEAUTY OF THE BEAST.

VARIANTS

CLA 250+
Long Range (AMG Line)
Max WLTP Range - 792 km

The CLA 250+ Long Range doesn't ask you to choose between sport and substance. AMG Line exterior styling, a performance-focused interior and extended electric range - all in one. Because the only thing better than looking the part, is going the distance too.

CLA 200
Standard Range (Progressive Line)
Max WLTP Range - 542 km

The CLA 200 Progressive Line opens with lightweight 18-inch wheels and fine chrome details that tell the world exactly what kind of car this is before you've even opened the door. Inside, comfort seats wrapped in ARTICO man-made leather sit against anthracite trim - a pairing so considered, it feels anything but standard.

INTRODUCING THE MERCEDES-BENZ CLA LAUNCH EDITION.

A CHARACTER STUDY ON STYLE.

Cosmos black magno | AMG night package | Front passenger screen | Leather upholstery | Ambient lighting with edition-specific colour tone | KEYLESS GO convenience package | Entertainment package | AMG floor mats with gold-coloured piping

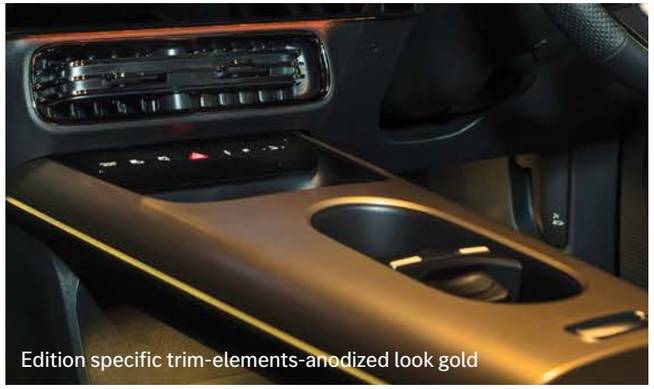

Edition specific trim-elements-anodized look gold

Superscreen

19-inch edition-specific alloys

EXTERIOR DESIGN

NICE TO GREET YOU.

The illuminated star grille and star-pattern lighting put 142 individually lit chrome-effect stars across the CLA's front panel. By day, a striking face. By night, something closer to a constellation.

ALL EYES AT THE BACK.

At the rear, a jewelled band of light spans the full width of the CLA, connecting two star-shaped taillights into a single, sweeping statement. A parting gesture as distinctive as it is dramatic.

EXTERIOR DESIGN

THE FRUNK OF THE MATTER.

The all-electric CLA brings something new to Mercedes-Benz: a 101-litre "frunk" tucked neatly under the bonnet. More room up front means more room for everything else at the back.

SLEIGHT OF HAND.

The flush door handles retract seamlessly into the bodywork when not in use, and extend automatically on approach - quietly improving aerodynamic efficiency, while making every arrival feel like the car is genuinely pleased to see you.

ALLOY WHEELS

CLA 250+ (Long Range)

45.7 cm (18-inch) AMG 5-spoke light-alloy wheels

CLA 200 (Standard Range)

45.7 cm (18-inch) aerodynamic light-alloy wheels in 5-twin-spoke design

PAINT OPTIONS

MANUFAKTUR Patagonia Red*

Cosmic Black*

Polar White*

Clear Blue#

MANUFAKTUR Alpine Grey#

Aqua Mint^

*Available with CLA 250+ and CLA 200 | #Exclusive to CLA 250+ | ^Exclusive to CLA 200

INTERIOR DESIGN

THE DETAILS ARE IN THE DOING.

SEAT OF POWER.

The AMG sports seats were built to hold you, not just carry you. Pronounced bolsters, Nappa leather paired with a multifunction steering wheel that puts everything at your fingertips.

THE SKY IS THE LIMIT.

A panoramic roof floods every seat with natural light by day and offers a spectacular view of the cosmos by night. The best seat in the house, whichever one you're in.

UPHOLSTERY OPTIONS

The two-tone black and clean white pearl ARTICO sport seats make an immediate impression, and then keep making it. With the fine look and feel of natural leather, ARTICO leather black and power red, ARTICO black and ARTICO ivory beige bring individual character to the cabin without compromise. Hard-wearing, easy to clean, and genuinely difficult to stop looking at.

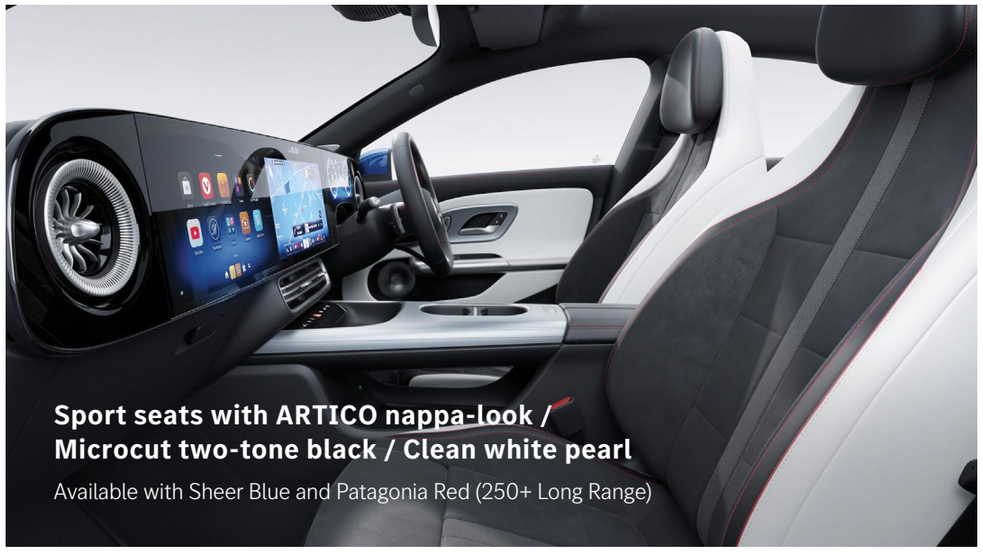

Sport seats with ARTICO nappa-look / Microcut two-tone black / Clean white pearl

Available with Sheer Blue and Patagonia Red (250+ Long Range)

ARTICO black

Available with Aqua-mint and MANUFAKTUR Patagonia Red (200 Standard Range)

Two-tone ARTICO nappa-look man-made leather black / power red

Available with Polar White, Cosmic Black and Alpine Grey (250+ Long Range)

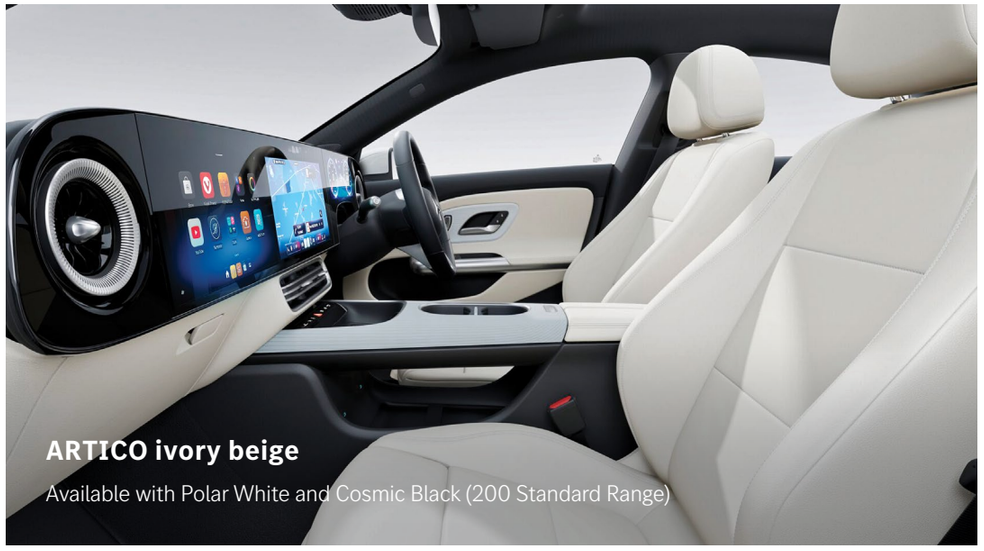

ARTICO ivory beige

Available with Polar White and Cosmic Black (200 Standard Range)

INTERIOR TRIM OPTIONS

SILVER LINING.

The best interior details never compete, they complement. Light brushed aluminium trim weaves through the cabin, adding just the right amount of contrast to make every surface feel more considered. The details that make the difference.

CLA 250+ (Long Range)

Light brushed aluminium trim elements

CLA 200 (Standard Range)

Matt white natural fibre silent lines trim elements available with ivory beige upholstery.

CLA 200 (Standard Range)

Ship's deck open-pore brown oak trim elements with aluminium lines available with beige upholstery.

TECHNOLOGY

SMARTER THAN IT LOOKS. AND IT LOOKS VERY SMART.

YOUR WISH IS ITS COMMAND.

Touch, and it responds. Configure, and it remembers. The CLA's central display presents information with a precision that makes every interaction feel completely natural. A cockpit this intuitive rarely needs an introduction.

ALWAYS ROUTING FOR YOU.

High-resolution satellite imagery, real-time traffic and online route guidance mean the CLA always knows the smartest way there. Apple CarPlay and Android Auto bring your contacts, music and apps along wirelessly. Everything you need, exactly where you need it.

NO STRINGS ATTACHED.

Wireless charging and multiple USB-C ports with USB Package Plus keep every device powered, front to back. In a car this connected, running out of battery really isn't an option.

Three-screen display configuration is available only in the Launch Edition.

MERCEDES-BENZ DIGITAL EXTRAS

The CLA only gets better and more intutive the moment you drive it away. Mercedes-Benz Digital Extras are connected services that work quietly in the background, so your car knows where you're going before you do. The cabin is ready when you arrive, and your Mercedes is always exactly where you left it.

Features may vary based on the VIN. Kindly login to MME Store and check respective features available for your car.

MBUX AUGMENTED REALITY NAVIGATION

Your surroundings, annotated in real time. A live camera view overlaid with 3D symbols and street names makes finding your way easier.

MBUX ENTERTAINMENT

Your favourite stations, songs and playlists, wherever the road takes you. Explore our selection of in-car apps and download versatile apps in your Mercedes-Benz.

MB. DRIVE ASSIST

Steering support, lane assistance and semi-automated driving. The CLA does more of the work, so you can focus on the road ahead.

MASSAGE FUNCTION ACTIVATION

A wellness break, on the move. Soothing seat massage functions that turn the daily commute into something rejuvenating.

GUARD 360° VEHICLE PROTECTION

All-round monitoring, all the time. with anti-theft alarm, collision notification, and anti-tow-away protection, your CLA looks after itself and you.

GUARD 360° VEHICLE PROTECTION PLUS*

Go further with add-ons: Stolen Vehicle Help with Recovery Support, Remote Emergency Key Deactivation, Theft and Parking Damage Notifications via App, and Interior & Exterior Vehicle Snapshots. Your CLA, protected on every front.

*These add-ons can only be activated with an active Guard 360° Vehicle Protection subscription.

COMFORT & SAFETY

YOU'RE IN GOOD HANDS.

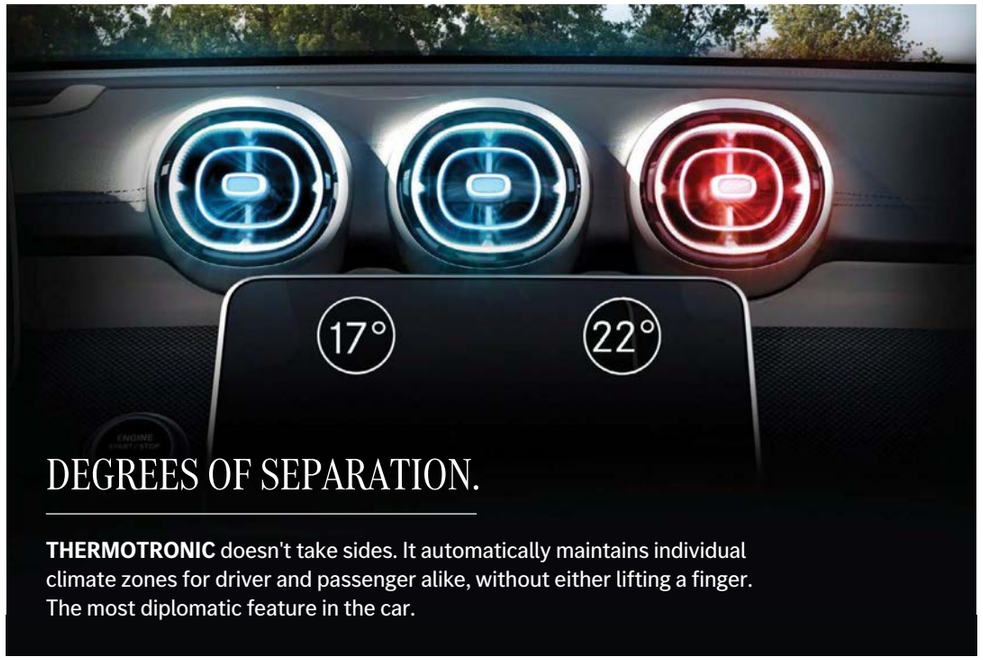

DEGREES OF SEPARATION.

THERMOTRONIC doesn't take sides. It automatically maintains individual climate zones for driver and passenger alike, without either lifting a finger. The most diplomatic feature in the car.

KNOWS YOU BY HEART.

The **Memory Package** stores up to three seat positions while four-way lumbar support adapts to your spine. Every time you get in, everything is exactly where you need it.

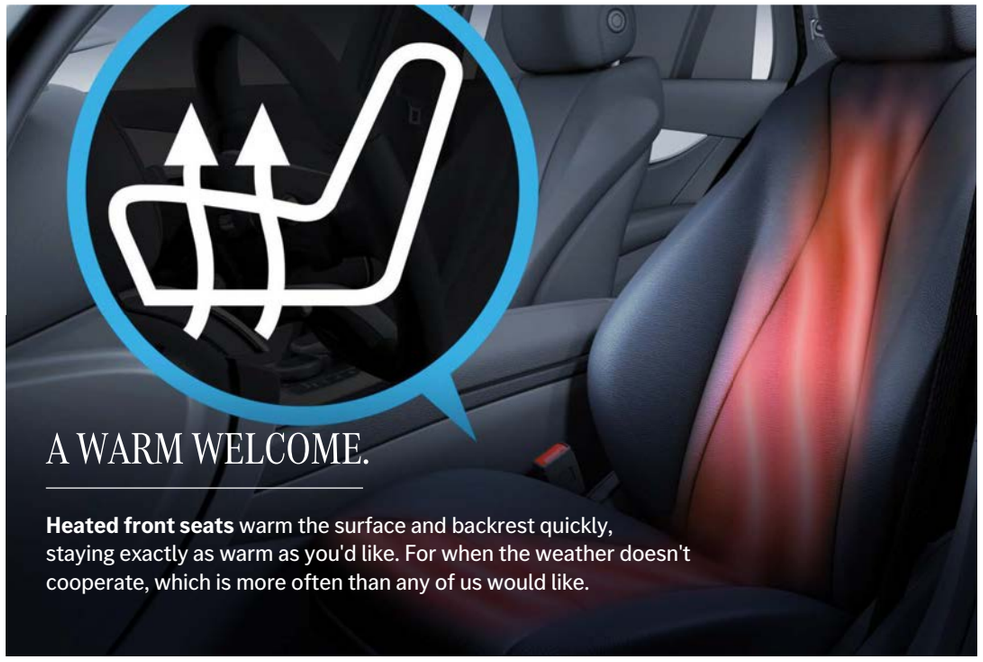

A WARM WELCOME.

Heated front seats warm the surface and backrest quickly, staying exactly as warm as you'd like. For when the weather doesn't cooperate, which is more often than any of us would like.

REST, ASSURED.

The **rear armrest** gives back seat passengers exactly what they deserve, a comfortable place to settle in, with integrated cup holders and storage that make longer journeys considerably more agreeable. Because no one in the CLA should feel like a passenger. Even the passengers.

ONE STEP AHEAD.

PRE-SAFE® detects an imminent collision and prepares occupants before impact. The centre airbag - a first in its class deploys between the front seats for side impact protection.
The best safety systems don't just respond. They anticipate.

THE SILENT GUARDIAN.

The **Mercedes-Benz Emergency Call System** works in the moments that matter most, automatically connecting with rescue services the instant an accident is detected.
The feature that acts as your silent guardian.

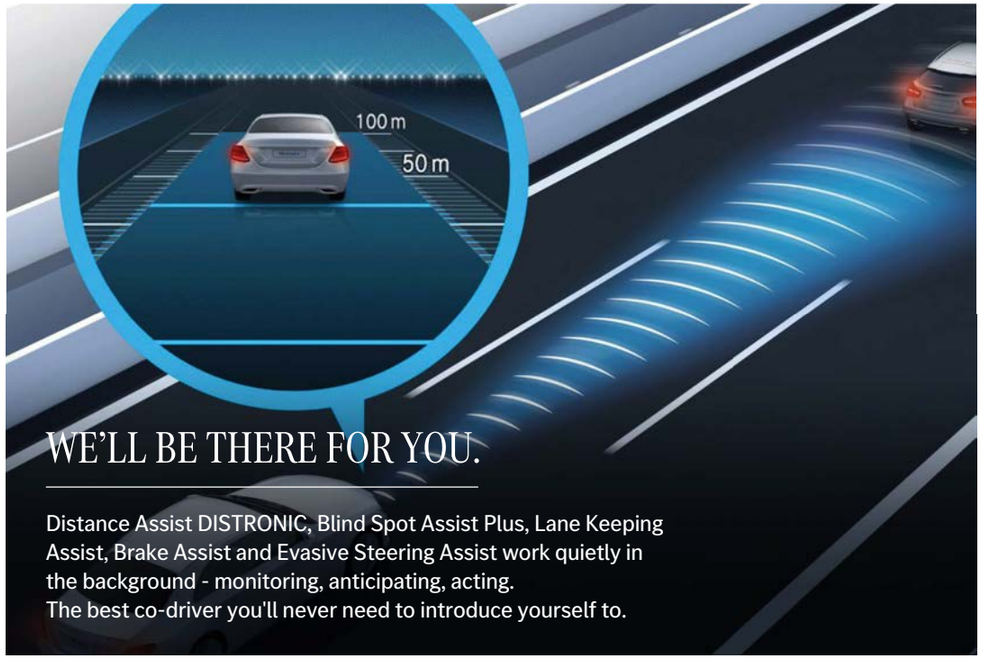

WE'LL BE THERE FOR YOU.

Distance Assist DISTRONIC, Blind Spot Assist Plus, Lane Keeping Assist, Brake Assist and Evasive Steering Assist work quietly in the background - monitoring, anticipating, acting.
The best co-driver you'll never need to introduce yourself to.

PARALLEL UNIVERSE.

A 360° camera, PARKTRONIC and MB.DRIVE PARKING ASSIST covers every angle, every sensor, every centimetre of space that looked impossible thirty seconds ago.
The only thing left to decide is how long to stay.

POWERTRAIN & CHASSIS

FIND WHAT DRIVES YOU.

THE FAST AND THE CHARGED.

The new CLA's 800-volt architecture, with ultra-fast charging capability and highly efficient energy transfer, puts 400 kilometres back in just 20 minutes at a compatible DC fast charger. Enough time for a coffee. Not much else.

THE SHORTEST STOP ON THE LONGEST JOURNEY.

The CLA's direct current charging system supports up to 320 kW at compatible 800-volt fast-charging stations, making it one of the most capable chargers in its class. A number that doesn't just impress on paper, but genuinely changes how you think about long-distance driving in an electric car.

THE NIGHT SHIFT.

The CLA's on-board AC charger handles up to 22 kW at home or public charging stations, which means the most productive charging session of your day is very likely the one that happens while you're fast asleep.

SMOOTH OPERATOR.

The CLA's **comfort suspension** keeps the drama on the road, not in the ride. Appealing suspension reserves soak up whatever the tarmac throws at it, while excellent driving stability ensures every corner is a pleasure rather than a negotiation.

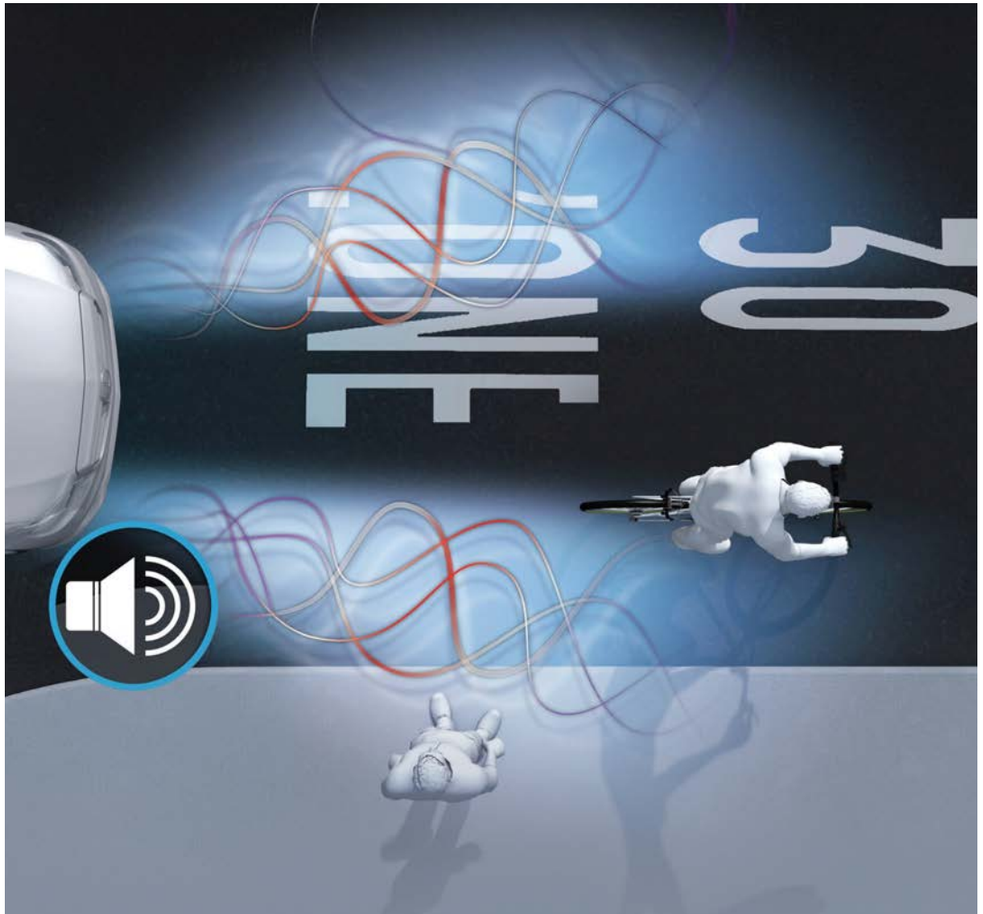

YOU HEARD IT HERE FIRST.

The **Acoustic Presence Indicator** ensures the CLA is heard before it's seen. Below 30 km/h, it generates a distinctive Mercedes-Benz sound outside the vehicle - so pedestrians always know it's there. Safety, with a rather good soundtrack.

STANDARD EQUIPMENT

EVERYTHING YOU'D EXPECT. AND THEN SOME.

SET THE MOOD.

Same car. Sixty-four different atmospheres. The CLA's **ambient lighting** lets you set the interior mood with a palette of colours that's broad enough to match any moment and any feeling. The commute, the road trip, the late night drive - each one deserves its own colour. Now each one has one.

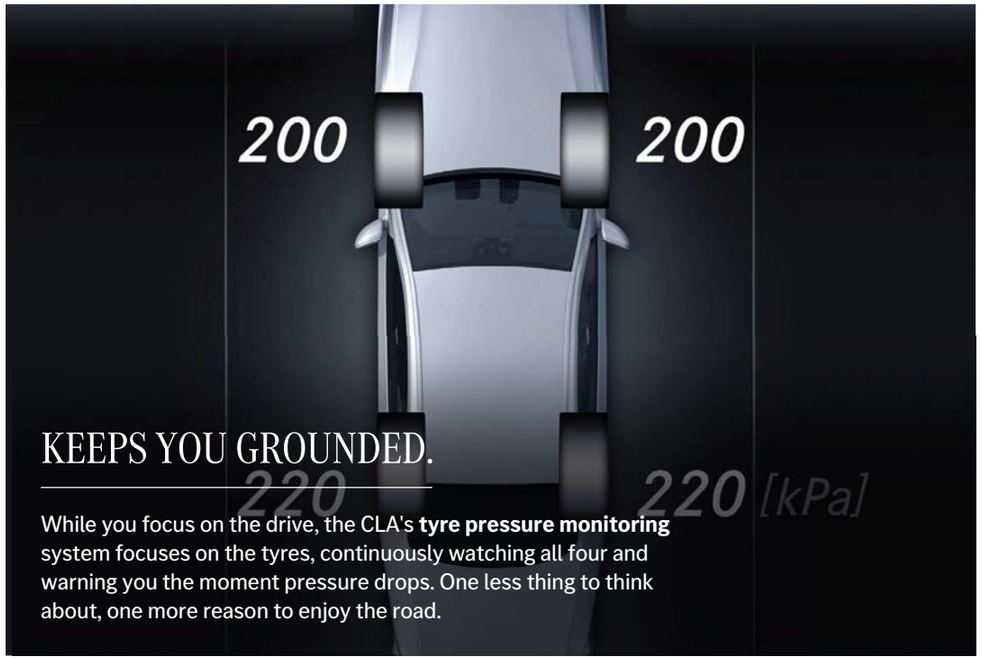

KEEPS YOU GROUNDED.

While you focus on the drive, the CLA's **tyre pressure monitoring** system focuses on the tyres, continuously watching all four and warning you the moment pressure drops. One less thing to think about, one more reason to enjoy the road.

THE SUPPORTING CAST.

A 12-volt socket, charging cables, **TIREFIT** repair kit, safety vest and summer tyres, the CLA tucks them all away without a fuss - for the simple reason that the best time to have them is before you need them.

FREES YOUR MIND, AND YOUR HANDS.

Walk up, get in, drive away — **KEYLESS-GO** handles the formalities so you don't have to. And when the parking space is doing its best to be difficult, the folding mirrors take that particular problem entirely off your hands. Effortless, in both the literal and Mercedes-Benz sense of the word.

FINANCIAL FREEDOM FOR YOUR JOURNEY.

Whether you prefer the simplicity of traditional ownership or flexibility of upgrading your car every few years, our financial solutions are designed to suit your lifestyle, to ensure that your experience is seamless just like your drive.

STAR Finance

Offers a seamless solution for straightforward Mercedes-Benz ownership, getting you behind the wheel instantly.

- Choose a repayment period ranging from 12 to 84 months.
- You own the vehicle from the very start of the contract term.
- Know exactly what your repayments are with a consistent, fixed rate.

STAR Agility+

For those who value flexibility, STAR Agility+ offers an Assured Buy-Back Value that guarantees your vehicle's future worth.

- Loan term ranging from 12 to 60 months.
- Annual mileage allowance that reflects your driving needs.
- Lower monthly repayments and the highest residual value.
- Inclusive maintenance and an extended warranty

END-OF-CONTRACT CHOICES

Upgrade | Retain | Return

GET IN TOUCH TO FIND YOUR PERFECT PLAN

Email: mbfsindia@mercedes-benz.com

Disclaimer: Terms & Conditions apply. Finance is at the sole discretion of the financer, Mercedes-Benz Financial Services India Pvt. Ltd.

SERVICES

SERVICE AS SEAMLESS AS THE DRIVE

ADVANCE ASSURANCE PROGRAM

Extended warranty for long-term peace of mind

Continue your ownership journey with confidence beyond the standard 3-year warranty. The Advance Assurance Program extends warranty coverage up to 6 years at a nominal cost, ensuring sustained protection and worry-free driving.

STAR EASE

Predictable maintenance. Exceptional value.

STAR Ease maintenance packages offer fixed-cost servicing based on model, mileage and tenure. Enjoy freedom from service-related surprises, along with benefits such as priority handling, reduced waiting times and faster service processes.

MOBILO

24x7 on-road assistance, wherever you go

Mobilo provides round-the-clock roadside assistance for complete mobility assurance. Standard for 3 years and extendable up to 8 years, it includes benefits such as towing support, replacement vehicle and hotel accommodation when required.

DIGITAL SERVICE DRIVE

Convenient. Transparent. Hassle-free.

Designed around your schedule, Digital Service Drive ensures seamless service experiences with enhanced transparency and customer-friendly processes, so your vehicle care is always effortless.

PREMIER EXPRESS PRIME

Comprehensive service delivered faster

For customers who value time, Premier Express Prime enables quicker service turnaround without compromising on quality. A brief visit, a thorough service available at selected locations.

MERCEDES-BENZ GENUINE PARTS

Engineered for your Star

Crafted to exact Mercedes-Benz standards, Genuine Parts preserve performance, safety and comfort. Backed by a warranty of up to 2 years, they ensure reliability and long-term ownership confidence. Terms and conditions apply

MERCEDES-BENZ APPROVED TYRES & ALLOYS

Optimized for performance and safety

Approved tyres are precisely matched to your vehicle's dynamics, while approved alloys enhance both performance and visual appeal ensuring every drive remains safe, comfortable and engaging.

MERCEDES-BENZ GENUINE CHEMICAL PRODUCTS

Tested, approved & environmentally responsible

Specially developed to meet Mercedes-Benz material compatibility and quality standards, these products support your vehicle throughout its lifecycle while complying with stringent environmental norms.

STAR EASE MAINTENANCE PROGRAM

YOUR MERCEDES-BENZ DESERVES THE BEST. AND SO DO YOU.

A Mercedes-Benz should feel effortless to own, not just to drive. STAR Ease is a pre-defined maintenance program - tailored to your model, tenure and mileage, that covers your service needs for as long as you choose, at a cost you agree to upfront.

No unexpected bills. No waiting around.
Just priority service handling, faster turnarounds and the confidence that your CLA is always in the hands that know it best.

Because the only thing that should demand your attention, is the road ahead.

Mercedes - Benz CLA 200+ and CLA 250+

Package type	Duration	Recommended Package Price
Compact packages (Maintenance)	4 years	₹60 000
	6 years	₹90 000
	8 years	₹115 000
Compact plus packages (Maintenance + Wear & tear)	4 years	₹200 000
	6 years	₹270 000
	8 years	₹390 000

TECHNICAL DATA

THE FACTS AND THE FIGURES.

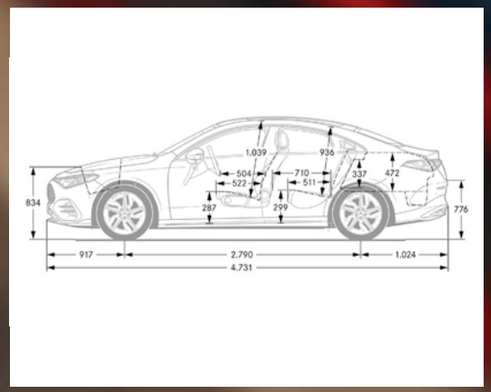

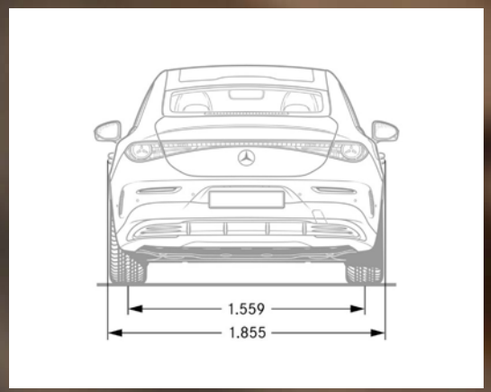

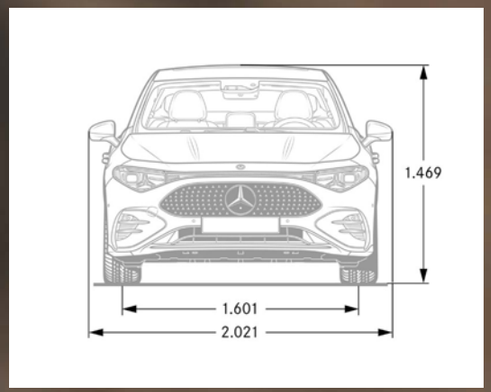

VARIANTS

The all-new CLA will be available in two variants, offering customers a choice between progressive design and enhanced performance.

Specification	CLA 200 (Standard Range)	CLA 250+ (Long Range)
Power	165 kW	200 kW
Torque	335 Nm	335 Nm
Battery capacity	58 kWh	85 kWh
WLTP range	542 km	792 km
0–100 km/h	7.5 s	6.7 s

✇ and Mercedes-Benz are trademarks of Mercedes-Benz Group AG.

Mercedes-Benz India Private Limited: E-3, MIDC Chakan - Phase III, Chakan Industrial Area, Kuruli & Nighoje, Tal: Khed, Pune - 410 501 (India)
Toll free No.: 0008000501888. e-mail: cs.ind@cac.mercedes-benz.com, website: www.mercedes-benz.co.in

Please note: This brochure is intended solely for general information, description, and illustration of the product, including optional functions and equipment, and may not be specific to any particular product, as product specifications are subject to change from time to time. Optional features, functions, and equipment may not be included in the standard, variant, or special edition products. Further, standard specifications of a product may also vary periodically. Colours shown in the brochure may differ from the actual product. Mercedes-Benz India reserves the right to make changes, without prior notice, to design, colours, materials, components, equipment, specifications, features, functions, makes, and models. The information contained in this brochure is accurate at the time of launch and may vary subsequently due to further developments or other reasons. Interested customers are advised to contact an authorised Mercedes-Benz Franchise Partner for the most up-to-date and exact product specifications and features. Images used in this brochure are for representative purposes only. Some vehicles depicted may be left-hand-drive models; however, Mercedes-Benz India manufactures and sells vehicles in India strictly in accordance with applicable motor vehicle regulations, and all vehicles sold are right-hand-drive only. All title, ownership, and intellectual property rights in and relating to this brochure, magazine, or publication material, including but not limited to copyrights, logos, names, trademarks, service marks, designs, text, images, links, concepts, and themes, are owned by Mercedes-Benz Group AG and/or its subsidiaries, or are used under authorised licence. Any reproduction, transmission, publication, performance, broadcast, alteration, licensing, creation of derivative works, or other use, in whole or in part, without the prior written consent of Mercedes-Benz India Private Limited, is strictly prohibited. Please note that certain services are offered free of charge for a period of three (03) years and may become chargeable upon expiry of three (03) years from the date of activation. Continuation of such services may be renewed through the Mercedes-Benz Store, subject to availability. For further details, please contact your preferred authorised Mercedes-Benz Franchise Partner. Mercedes-Benz cars: The Mercedes-Benz CLA is equivalent to Bharat Stage VI equivalent emission norms. CIN - U34102PN1994PTC083160